ONNERA GROUP

DESPIECE TECNICO
TECHNICAL PARTS

LAVA-VASOS
GLASS-WASHERS

MODELOS / MODELS

GM-OEM-350 / B / DD / UK / SA
GM-OEM-400 / SOFT / B / DD / UK / SA

50Hz/60Hz

Vers. February 2019
Revised

MODEL-DRAWING RELATION

MODEL	GW_001	GW_002	GW_003	GW_004	GW_005	GW_006	GW_009
	Structure	Wash Functional Part	Gravity Drain	Drain Pump	Rinsing Functional Part	Soft Rinse Functional Part	Electric Functional Part
GM-OEM-350	X	X	X		X		X
GM-OEM-350 DD	X	X	X		X		X
GM-OEM-350 B	X	X		X	X		X
GM-OEM-35 B DD	X	X		X	X		X
GM-OEM-350 SA	X	X	X		X		X
GM-OEM-350 DD SA	X	X	X		X		X
GM-OEM-350 B SA	X	X		X	X		X
GM-OEM-350 B DD SA	X	X		X	X		X
GM-OEM-350 UK	X	X	X		X		X
GM-OEM-350 DD UK	X	X	X		X		X
GM-OEM-350 B SA UK	X	X		X	X		X
GM-OEM-35 B DD UK	X	X		X	X		X
GM-OEM-350 SA UK	X	X	X		X		X
GM-OEM-350 DD SA UK	X	X	X		X		X
GM-OEM-350 B SA UK	X	X		X	X		X
GM-OEM-350 B DD SA UK	X	X		X	X		X
GM-OEM-400	X	X	X		X		X
GM-OEM-400 DD	X	X	X		X		X
GM-OEM-400 B	X	X		X	X		X
GM-OEM-400 B DD	X	X		X	X		X
GM-OEM-400 SA	X	X	X		X		X
GM-OEM-400 DD SA	X	X	X		X		X
GM-OEM-400 B SA	X	X		X	X		X
GM-OEM-400 B DD SA	X	X		X	X		X
GM-OEM-400 UK	X	X	X		X		X
GM-OEM-400 DD UK	X	X	X		X		X
GM-OEM-400 B SA UK	X	X		X	X		X
GM-OEM-400 B DD UK	X	X		X	X		X
GM-OEM-400 SA UK	X	X	X		X		X
GM-OEM-400 DD SA UK	X	X	X		X		X
GM-OEM-400 B SA UK	X	X		X	X		X
GM-OEM-400 B DD SA UK	X	X		X	X		X
GM-OEM-400 SOFT	X	X	X			X	X
GM-OEM-400 SOFT DD	X	X	X			X	X
GM-OEM-400 SOFT B	X	X		X		X	X
GM-OEM-400 SOFT B DD	X	X		X		X	X
GM-OEM-400 SOFT UK	X	X	X			X	X
GM-OEM-400 SOFT DD UK	X	X	X			X	X
GM-OEM-400 SOFT B UK	X	X		X		X	X
GM-OEM-400 SOFT B DD UK	X	X		X		X	X

* Si su modelo no esta en la lista de planos, escoga la descripcion mas cercana

* If your model does appear in the list of drawings, choose the closest description

OPTIONS	DESCRIPCIÓN	DESCRIPTION
B	Bomba de desagüe	Drain Pump
DD	Dosificador de detergente	Detergent dispenser
SA	Ramas de lavado en acero inoxidable	Rinsing arms in Stainless Steel
UK	Potencia de cuba y cable modificado para R.U	Modified Tank power and power cord for UK
SOFT	Descalcificador integrado	Built in water softener

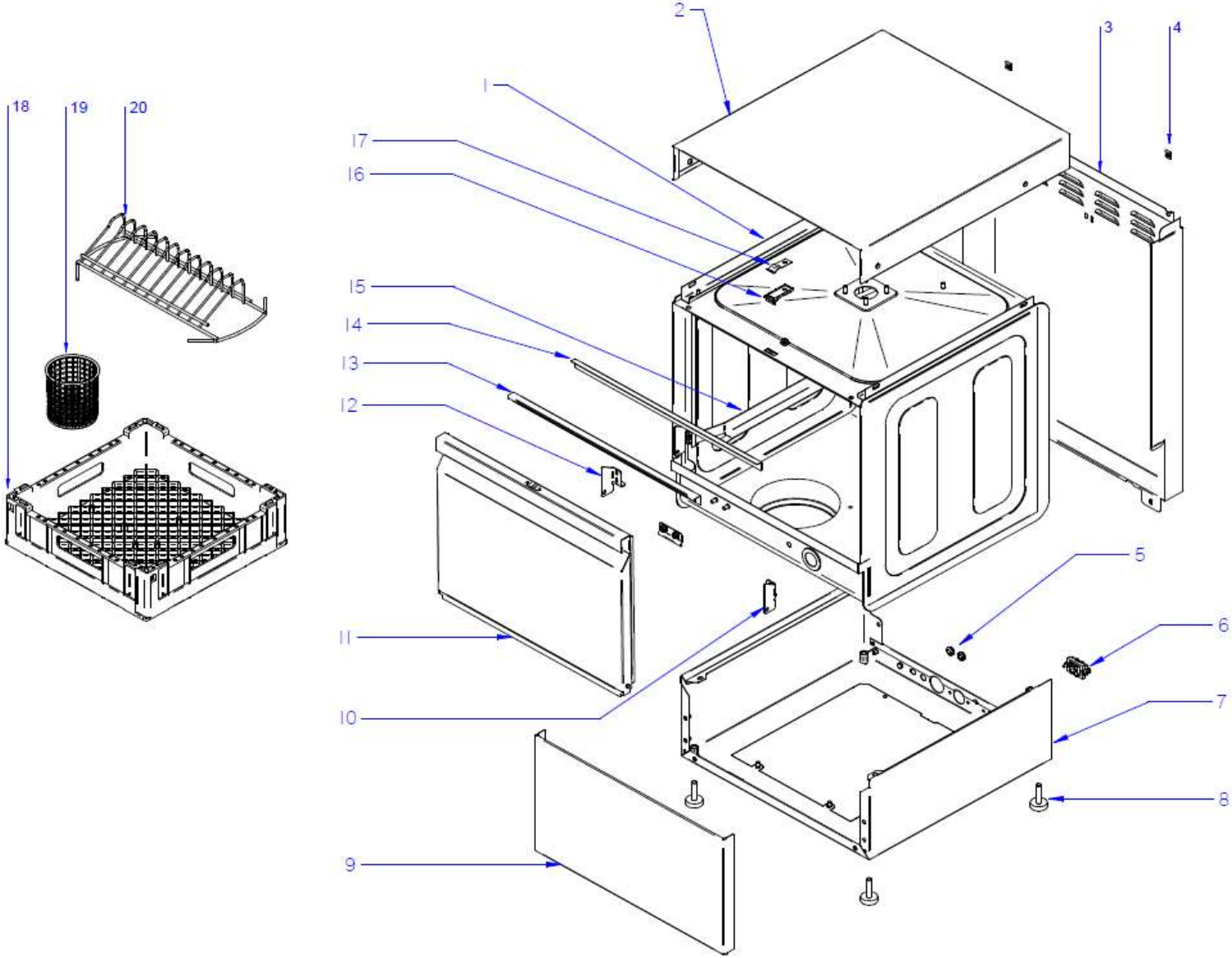

N plano / Drawing N	Firma / Signature	Fecha / Date	Aparato / Appliance		Lamina / Sheet
GW_001	Filip.S	02/2018	GLASS-WASHERS GRAND 350 & 400	ARMAZON / FRAME	1

ONNERA POLAND

ZONA / ZONE	ARMAZON LAVA-VASOS / GW FRAME	LÁMINA / DRAWING	GW_001

ITEM	REFERENCIA REFERENCE	DENOMINACIÓN	DENOMINATION	GM-OEM-350	GM-OEM-350 B	GM-OEM-350 DD	GM-OEM-350 B DD	GM-OEM-350 UK	GM-OEM-350 B UK	GM-OEM-350 DD UK	GM-OEM-350 B DD UK					RECOMMENDED	ELIMINADO ELIMINATED	INTRODUCIDO INTRODUCED	NOTAS NOTES
1	12021892	SOPORTE PANEL SUPERIOR 350	LID HOLDER 350	2	2	2	2	2	2	2	2								
2	12139538	PANEL SUPERIOR 350	LID PANEL 350	2	2	2	2	2	2	2	2								
3	12139537	PANEL POSTERIOR 350	GW-350 BACK PANEL	1	1	1	1	1	1	1	1								
4	12010134	TUERCA RAPIDA M-5	M-5 FAST NUT	8	8	8	8	8	8	8	8								
5	12037842	PASAHILOS DE GOMA	RUBBER CONDUIT PROTECTOR	1	1	1	1	1	1	1	1								
6	12024230	RETENEDOR DE CABLE	CABLE HOLDER	1	1	1	1	1	1	1	1								
7	12140246	BASE LAVAVASOS COMPLETO 350	COMPLETE GW-350 BASE	2	2	2	2	2	2	2	2								
8	12024163	PATA REGULABLE	ADJUSTABLE LEG	1	1	1	1	1	1	1	1								
9	12139531	PANEL FRONTAL INFERIOR 350	FRONT BOTTOM PANEL 350	1	1	1	1	1	1	1	1								
10	12048774	SOPORTE PUERTA DERECHA	RIGHT DOOR SUPPORT	1	1	1	1	1	1	1	1						1/1/2021		
10	12271860	SOPORTE PUERTA IZQUIERDA	DOOR RIGHT SUPPORT	1	1	1	1	1	1	1	1							1/1/2021	8102140954
11	*	PUERTA COMPLETA 400	COMPLETE DOOR 400	1	1	1	1	1	1	1	1								Check Optionals
12	12048627	SOPORTE PUERTA IZQUIERDA	DOOR LEFT SUPPORT	1	1	1	1	1	1	1	1						1/1/2021		
12	12271839	SOPORTE PUERTA IZQUIERDA	DOOR LEFT SUPPORT	1	1	1	1	1	1	1	1							1/1/2021	8102140954
13	12102061	PERFIL JUNTA VAHOS 350	DOOR GASKET PROFILE 350	1	1	1	1	1	1	1	1								
14	12087200	PERFIL VAHOS 350	DOOR GASKET 350	1	1	1	1	1	1	1	1								
15	12049133	GUIA CESTILLO IZQU. 350	LEFT BASKET GUIDE 350	1	1	1	1	1	1	1	1								
S/Nº	12049135	GUIA CESTILLO DERECHA 350	RIGHT BASKET GUIDE 350	1	1	1	1	1	1	1	1								
16	12087183	MACHO CIERRE PUERTA	DOOR PLASTIC BLOCKER	1	1	1	1	1	1	1	1								
17	12087186	FLEJE CIERRE PUERTA	DOOR CLOSING SPRING PLATE	1	1	1	1	1	1	1	1								
18	12024550	CESTILLO 350	350 BASKET	2	2	2	2	2	2	2	2								
19	12025242	CESTILLO CUBIERTOS LVS	GW CUTTLERY BASKET	1	1	1	1	1	1	1	1								
20	12025030	SUPLEMENTO PLATILLOS LVS	DISH-HOLDER	_	_	_	_	_	_	_	_								

ZONA / ZONE	ARMAZON LAVA-VASOS / GW FRAME	LÁMINA / DRAWING	GW_001

ITEM	REFERENCIA REFERENCE	DENOMINACIÓN	DENOMINATION	GM-OEM-400	GM-OEM-400 B	GM-OEM-400 DD	GM-OEM-400 B DD	GM-OEM-400 UK	GM-OEM-400 B UK	GM-OEM-400 DD UK	GM-OEM-400 B DD UK					RECOMMENDED	ELIMINADO ELIMINATED	INTRODUCIDO INTRODUCED	NOTAS NOTES
1	12170256	SOPORTE PANEL SUPERIOR 400	LID HOLDER 400	1	1	1	1	1	1	1	1								
2	12140262	PANEL SUPERIOR 400	GW-400 LID	2	2	2	2	2	2	2	2								
3	12010134	TUERCA RAPIDA M-5	M-5 FAST NUT	8	8	8	8	8	8	8	8								
4	12140261	PANEL POSTERIOR 400	GW-400 BACK PANEL	1	1	1	1	1	1	1	1								
5	12037842	PASAHILOS DE GOMA	RUBBER CONDUIT PROTECTOR	1	1	1	1	1	1	1	1								
6	12024230	RETENEDOR DE CABLE	CABLE HOLDER	1	1	1	1	1	1	1	1								
7	12140269	BASE LAVAVASOS COMPLETO 400	COMPLETE GW-400 BASE	2	2	2	2	2	2	2	2								
8	12024163	PATA REGULABLE	ADJUSTABLE LEG	1	1	1	1	1	1	1	1								
9	12140260	PANEL FRONTAL INFERIOR 400	FRONT BOTTOM PANEL 400	1	1	1	1	1	1	1	1								
10	12048774	SOPORTE PUERTA DERECHA	RIGHT DOOR SUPPORT	1	1	1	1	1	1	1	1						1/1/2021		
10	12271860	SOPORTE PUERTA IZQUIERDA	DOOR RIGHT SUPPORT	1	1	1	1	1	1	1	1							1/1/2021	8102140954
11	*	PUERTA COMPLETA 400	COMPLETE DOOR 400	1	1	1	1	1	1	1	1								Check Optionals
12	12048627	SOPORTE PUERTA IZQUIERDA	DOOR LEFT SUPPORT	1	1	1	1	1	1	1	1						1/1/2021		
12	12271839	SOPORTE PUERTA IZQUIERDA	DOOR LEFT SUPPORT	1	1	1	1	1	1	1	1							1/1/2021	8102140954
13	12102035	PERFIL JUNTA VAHOS 400	DOOR GASKET PROFILE400	1	1	1	1	1	1	1	1								
14	12101867	PERFIL VAHOS 400	DOOR GASKET 400	1	1	1	1	1	1	1	1								
15	12102194	GUIA CESTILLO DERECHA 400	RIGHT BASKET GUIDE 400	1	1	1	1	1	1	1	1								
S/Nº	12102193	GUIA CESTILLO IZQU. 400	LEFT BASKET GUIDE 400	1	1	1	1	1	1	1	1								
16	12087183	MACHO CIERRE PUERTA	DOOR PLASTIC BLOCKER	1	1	1	1	1	1	1	1								
17	12087186	FLEJE CIERRE PUERTA	DOOR CLOSING SPRING PLATE	1	1	1	1	1	1	1	1								
18	12025069	CESTILLO 400	400 BASKET	2	2	2	2	2	2	2	2								
19	12025242	CESTILLO CUBIERTOS LVS	GW CUTTLERY BASKET	1	1	1	1	1	1	1	1								
20	12025030	SUPLEMENTO PLATILLOS LVS	DISH-HOLDER	1	1	1	1	1	1	1	1								

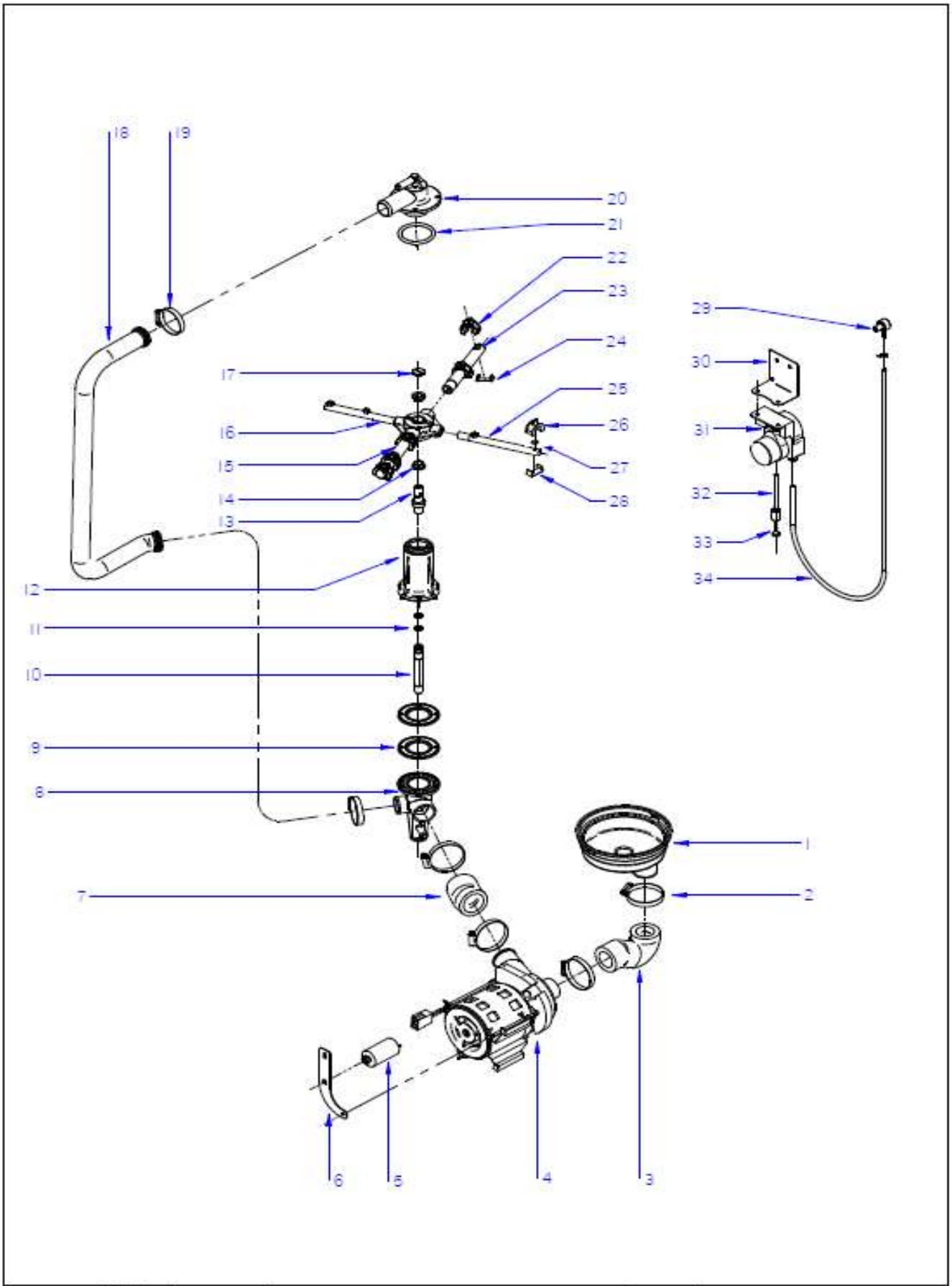

N plano / Drawing N.	Firma / Signature	Fecha / Date	Aparato / Appliance PARTE FUNCIONAL LAVADO / WASHING FUNCTIONAL PART	Lamina / Sheet	
GW-002	Aitor.U	02/2018	GLASS-WASHERS GRAND-350 & 400	2	ONNERA POLAND

ZONA / ZONE	PARTE FUNCIONAL LAVADO / WASHING FUNCTIONAL PART	LAMINA / DRAWING	GW_002

ITEM	REFERENCIA REFERENCE	DENOMINACIÓN	DENOMINATION	GM-OEM-350	GM-OEM-350 B	GM-OEM-350 DD	GM-OEM-350 B DD	GM-OEM-350 SA	GM-OEM-350 B SA	GM-OEM-350 DD SA	GM-OEM-350 B DD SA					RECOMMENDED	ELIMINADO ELIMINATED	INTRODUCIDO INTRODUCED	NOTAS NOTES
1	12023617	CUBETA_EVCO-21	Drainage Bowl GW	1	1	1	1	1	1	1	1								
S/N	12025195	ABRAZADERA CUBETA COMPLETA	Drainage Bowl Clamp GW	1	1	1	1	1	1	1	1								
2	12009986	ABRAZADERA 32-50	32-50 CLAMP	4	4	4	4	4	4	4	4								
3	12023670	CODO ASPIRACION	Wash Pump Inlet Pipe GW	1	1	1	1	1	1	1	1								
4	12023429	BOMBA LAVADO 50/60Hz 260 W	WASHIG 50/60Hz 260 W	1	1	1	1	1	1	1	1					X			
5	12024346	CONDENSADOR 6 MF	6 MF CAPACITOR	1	1	1	1	1	1	1	1								
6	12139529	SOPORTE BOMBA LAVADO 350	WASHIG PUMP HANGER 350	1	1	1	1	1	1	1	1								
7	12023607	CODO IMPULSION	Wash Pump Outlet Pipe GW	1	1	1	1	1	1	1	1								
8	12024703	PASAMUROS CESTO CUADRADO	Lower Outer Feedthrough GW	1	1	1	1	1	1	1	1								
9	12023533	JUNTA ESTANQUEIDAD	Bottom Feedthrough Gasket GW	2	2	2	2	2	2	2	2								
10	12023801	EMPALME ACLARADO	Rinsing Connector	1	1	1	1	1	1	1	1								
11	12009911	JUNTA TO.10.82X14.38X1.78	O-ring10,82x14,38x1,78	2	2	2	2	2	2	2	2								
12	12025133	SOPORTE INFER. CUADRO COM	Botton Feedthrough GW	1	1	1	1	1	1	1	1								
13	12025114	EJE_LAVAVASOS	Arm rotation central shaft GW	2	2	2	2	2	2	2	2								
14	12024086	CASQUILLO CRUCETA	Arm holder sleeve GW	4	4	4	4	4	4	4	4								
15	12019827	RAMA LAVADO A 350 INOX.	SS WASHING BRANCH A 350	_	_	_	_	2	2	2	2								
15	12024138	RAMA LAVADO A 350 PLÁSTICO	PLASTIC WASHING BRANCH A 350	2	2	2	2	_	_	_	_								
16	12020475	RAMA ACLARADO A 350 INOX.	SS RINSING BRANCH A 350	_	_	_	_	2	2	2	2								
16	12025253	RAMA ACLARADO A 350 PLÁSTICO	PLASTIC RINSING BRANCH A 350	2	2	2	2	_	_	_	_								
17	12009829	TORNILLO ESPECIAL M5X0.8	Screw special INOX M5X7MM	2	2	2	2	2	2	2	2								
18	12024059	ARBOL LAVADO 350	WASHING TREE 350	1	1	1	1	1	1	1	1								
19	12009997	ABRAZADERA 25-40	Worm clamp 25-40 mm	2	2	2	2	2	2	2	2								
20	12023590	SOPORTE DISTRIBUIDOR SUPERIOR	Upper Feedthrough GW	1	1	1	1	1	1	1	1								
21	12010079	JUNTA TOR.50.17X60.83X5.3	O-RING 50,17x60,83x5,33	1	1	1	1	1	1	1	1								
22	12023732	TOBERA LAVADO	Washing Nozzle	10	10	10	10	10	10	10	10								
23	12020475	RAMA LAVADO B 350 INOX.	WASHING BRANCH B 350 SS	_	_	_	_	2	2	2	2								
23	12025251	RAMA LAVADO PLÁSTICO B 350	PLASTIC WASHING BRANCH B 350	2	2	2	2	_	_	_	_								
24	12023710	ENGANCHE TOBERA LAVADO	WASHING NOZZLE HOLDER	10	10	10	10	10	10	10	10								
25	12020476	RAMA ACLARADO B 350 INOX.	SS RINSING BRANCH B 350	_	_	_	_	2	2	2	2								
25	12024137	RAMA ACLARADO B 350	PLASTIC RINSING BRANCH B 350	2	2	2	2	_	_	_	_								

ZONA / ZONE	PARTE FUNCIONAL LAVADO / WASHING FUNCTIONAL PART	LAMINA / DRAWING	

ITEM	REFERENCIA REFERENCE	DENOMINACIÓN	DENOMINATION	GM-OEM-350	GM-OEM-350 B	GM-OEM-350 DD	GM-OEM-350 B DD	GM-OEM-350 SA	GM-OEM-350 B SA	GM-OEM-350 DD SA	GM-OEM-350 B DD SA					RECOMMENDED	ELIMINADO ELIMINATED	INTRODUCIDO INTRODUCED	NOTAS NOTES
26	12024252	TOBERA ACLARADO INOX.	SS RINSING NOZZLE	_	_	_	_	8	8	8	8								
26	12024077	TOBERA ACLARADO PLASTICO	PLASTIC RINSING NOZZLE	8	8	8	8	_	_	_	_								
27	12009912	JUNTA TOR. 5.28X8.84X1.78	O-RING 5,28x8,84x1,78	8	8	8	8	_	_	_	_								
28	12024006	ENGANCHE TOBERA ACLARADO	RINSE NOZZLE HOLDER	8	8	8	8	_	_	_	_								
S/Nº	12182946	SET DISPENSADOR DETERGENTE LVS	GW DETERGENT DISPENSER SER	_	_	1	1	_	_	1	1								
29	12024531	PASAMUROS DETERGENTE	Detergent Feedthrought	_	_	1	1	1	1	1	1								
30	12140258	SOPORTE DOSIFICADOR	DISPENSER HOLDER	_	_	1	1	1	1	1	1								
31	12133011	DOSIFICADOR DE DETERGENTE	DETERGENT DISPENSER	_	_	1	1	1	1	1	1					X			
32	12024139	CONDUCTO ASPIRACION DET.	DETERGENT ASPIRATION PIPE	_	_	1	1	1	1	1	1								
33	12164632	PESO FILTRO	FILTER WEIGHT	_	_	1	1	1	1	1	1								
34	11000079	CONDUCTO DOSIF. TRANSP 6X4	DET. DISPENSER PIPE 6X4	_	_	1	1	1	1	1	1								

ZONA / ZONE	PARTE FUNCIONAL LAVADO / WASHING FUNCTIONAL PART	LAMINA / DRAWING	GW_002

ITEM	REFERENCIA REFERENCE	DENOMINACIÓN	DENOMINATION	GM-OEM-400	GM-OEM-400 B	GM-OEM-400 DD	GM-OEM-400 B DD	GM-OEM-400 SA	GM-OEM-400 B SA	GM-OEM-400 DD SA	GM-OEM-400 B DD SA					RECOMMENDED	ELIMINADO ELIMINATED	INTRODUCIDO INTRODUCED	NOTAS NOTES
1	12023617	CUBETA_EVCO-21	Drainage Bowl GW	1	1	1	1	1	1	1	1								
	12025195	ABRAZADERA CUBETA COMPLETA	Drainage Bowl Clamp GW	1	1	1	1	1	1	1	1								
2	12009986	ABRAZADERA 32-50	32-50 CLAMP	4	4	4	4	4	4	4	4								
3	12023670	CODO ASPIRACION	Wash Pump Inlet Pipe GW	1	1	1	1	1	1	1	1								
4	12023429	BOMBA LAVADO 50/60Hz 260 W	WASHIG 50/60Hz 260 W	1	1	1	1	1	1	1	1					X			
5	12024346	CONDENSADOR 6MF	6MF CAPACITOR	1	1	1	1	1	1	1	1								
6	12140257	SOPORTE BOMBA LAVADO 400	WASHIG PUMP HANGER 400	1	1	1	1	1	1	1	1								
7	12023607	CODO IMPULSION	Wash Pump Outlet Pipe GW	1	1	1	1	1	1	1	1								
8	12024703	PASAMUROS CESTO CUADRADO	Lower Outer Feedthrough GW	1	1	1	1	1	1	1	1								
9	12023533	JUNTA ESTANQUEIDAD	Bottom Feedthrough Gasket GW	2	2	2	2	2	2	2	2								
10	12023801	EMPALME ACLARADO	Rinsing Connector	1	1	1	1	1	1	1	1								
11	12009911	JUNTA TO.10.82X14.38X1.78	O-ring10,82x14,38x1,78	2	2	2	2	2	2	2	2								
12	12025133	SOPORTE INFER. CUADRO COM	Botton Feedthrough GW	1	1	1	1	1	1	1	1								
13	12025114	EJE_LAVAVASOS	Arm rotation central shaft GW	2	2	2	2	2	2	2	2								
14	12024086	CASQUILLO CRUCETA	Arm holder sleeve GW	4	4	4	4	4	4	4	4								
15	12022381	RAMA LAVADO A 400 INOX.	SS WASHING BRANCH A 400	_	_	_	_	2	2	2	2								
15	12126179	RAMA LAVADO A 400 PLÁSTICO	PLASTIC WASHING BRANCH A 400	2	2	2	2	_	_	_	_								
16	12022613	RAMA ACLARADO A 400 INOX.	SS RINSING BRANCH A 400	_	_	_	_	2	2	2	2								
16	12023526	RAMA ACLARADO A 400 PLÁSTICO	PLASTIC RINSING BRANCH A 400	2	2	2	2	_	_	_	_								
17	12009829	TORNILLO ESPECIAL M5X0.8	Screw special INOX M5X7MM	2	2	2	2	2	2	2	2								
18	12025154	ARBOL LAVADO 400	WASHING TREE 400	1	1	1	1	1	1	1	1								
19	12009997	ABRAZADERA 25-40	Worm clamp 25-40 mm	2	2	2	2	2	2	2	2								
20	12023590	SOPORTE DISTRIBUIDOR SUPERIOR	Upper Feedthrough GW	1	1	1	1	1	1	1	1								
21	12010079	JUNTA TOR.50.17X60.83X5.3	O-RING 50,17x60,83x5,33	1	1	1	1	1	1	1	1								
22	12023732	TOBERA LAVADO	Washing Nozzle	12	12	12	12	12	12	12	12								
23	12022382	RAMA LAVADO B 400 INOX.	WASHING BRANCH B 400 SS	_	_	_	_	2	2	2	2								
23	12126198	RAMA LAVADO PLÁSTICO B 400	PLASTIC WASHING BRANCH B 400	2	2	2	2	_	_	_	_								
24	12023710	ENGANCHE TOBERA LAVADO	WASHING NOZZLE HOLDER	12	12	12	12	12	12	12	12								
25	12022710	RAMA ACLARADO B 400 INOX.	SS RINSING BRANCH B 400	_	_	_	_	2	2	2	2								
25	12023525	RAMA ACLARADO B 400	PLASTIC RINSING BRANCH B 400	2	2	2	2	_	_	_	_								

ZONA / ZONE	PARTE FUNCIONAL LAVADO / WASHING FUNCTIONAL PART	LAMINA / DRAWING	GW_002

ITEM	REFERENCIA REFERENCE	DENOMINACIÓN	DENOMINATION	GM-OEM-400	GM-OEM-400 B	GM-OEM-400 DD	GM-OEM-400 B DD	GM-OEM-400 SA	GM-OEM-400 B SA	GM-OEM-400 DD SA	GM-OEM-400 B DD SA					RECOMMENDED	ELIMINADO ELIMINATED	INTRODUCIDO INTRODUCED	NOTAS NOTES
26	12024252	TOBERA ACLARADO INOX.	SS RINSING NOZZLE	_	_	_	_	10	10	10	10								
26	12024077	TOBERA ACLARADO PLASTICO	PLASTIC RINSING NOZZLE	10	10	10	10	_	_	_	_								
27	12009912	JUNTA TOR. 5.28X8.84X1.78	O-RING 5,28x8,84x1,78	10	10	10	10	_	_	_	_								
28	12024006	ENGANCHE TOBERA ACLARADO	RINSE NOZZLE HOLDER	10	10	10	10	_	_	_	_								
S/Nº	12182946	SET DISPENSADOR DETERGENTE LVS	GW DETERGENT DISPENSER SER	_	_	1	1	_	_	1	1								
29	12024531	PASAMUROS DETERGENTE	Detergent Feedthrought	_	_	1	1	1	1	1	1								
30	12140258	SOPORTE DOSIFICADOR	DISPENSER HOLDER	_	_	1	1	1	1	1	1								
31	12133011	DOSIFICADOR DE DETERGENTE	DETERGENT DISPENSER	_	_	1	1	1	1	1	1					X			
32	12024139	CONDUCTO ASPIRACION DET.	DETERGENT ASPIRATION PIPE	_	_	1	1	1	1	1	1								
33	12164632	PESO FILTRO	FILTER WEIGHT	_	_	1	1	1	1	1	1								
34	11000079	CONDUCTO DOSIF. TRANSP 6X4	DET. DISPENSER PIPE 6X4	_	_	1	1	1	1	1	1								

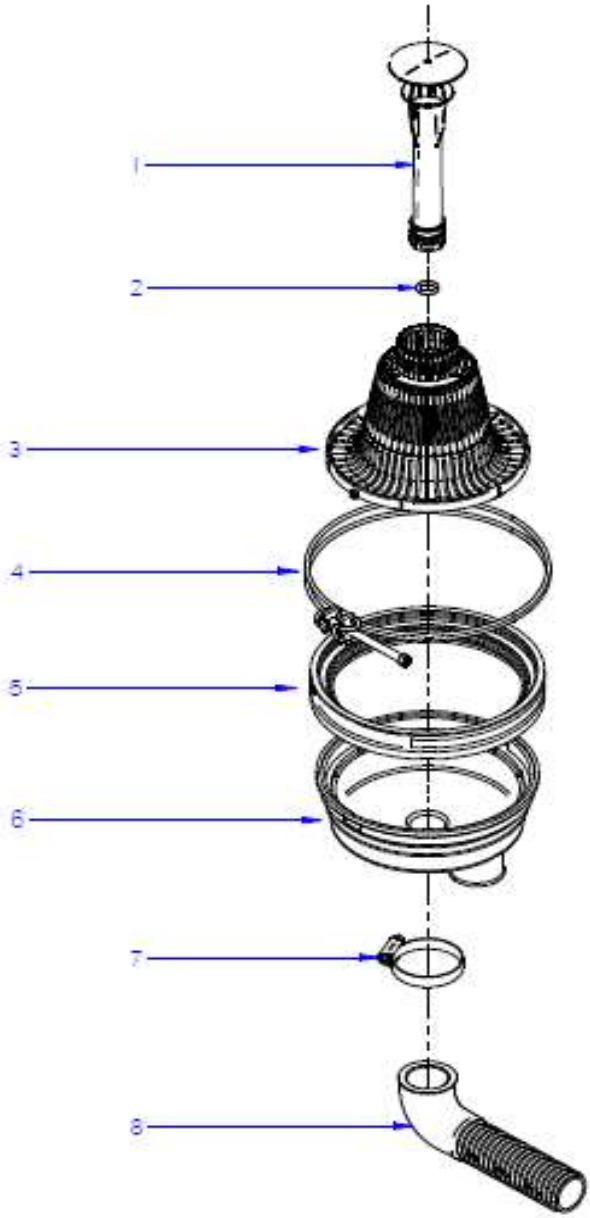

Drawing N.	Signature	Date	Devices: GRAVITY DRAINAGE	Sheet	
GW-03	Aitor U	02-2018	GLASSWASHERS GRAND-350 & 400	3	ONNERA POLAND

ZONA / ZONE	DESAGÜE POR GRAVEDAD / GRAVITY DRAINAGE	LAMINA / DRAWING	GW_003

ITEM	REFERENCIA REFERENCE	DENOMINACIÓN	DENOMINATION	GM-OEM-350	GM-OEM-350 DD	GM-OEM-350 UK	GM-OEM-350 DD UK	GM-OEM-350 SA	GM-OEM-350 DD SA	GM-OEM-350 SA UK	GM-OEM-350 DD SA UK					RECOMMENDED	ELIMINADO ELIMINATED	INTRODUCIDO INTRODUCED	NOTAS NOTES
1	12092017	ALIVIADERO_LVS	DRAIN PLUG DW	1	1	1	1	1	1	1	1								
2	12104085	JUNTA TORIC 25,2x19,2x23	O-RING 25,2x19,2x23	1	1	1	1	1	1	1	1								
3	12092003	FILTRO CUBA LVS	DRAIN BOWL FILTER	1	1	1	1	1	1	1	1								
4	12025195	ABRAZADERA CUBETA COMPLETA	DRAIN BOWL CLAMP	1	1	1	1	1	1	1	1								
5	12024113	JUNTA CUBETA	DRAIN BOWL GASKET	1	1	1	1	1	1	1	1								
6	12023617	CUBETA	DRAIN BOWL	1	1	1	1	1	1	1	1								
7	12009997	ABRAZADERA 25-40	Worm clamp 25-40 mm	1	1	1	1	1	1	1	1								
8	12024114	MANGUERA DESAGÜE	DRAINING PIPE	1	1	1	1	1	1	1	1								

ZONA / ZONE	DESAGÜE POR GRAVEDAD / GRAVITY DRAINAGE	LAMINA / DRAWING	GW_003

ITEM	REFERENCIA REFERENCE	DENOMINACIÓN	DENOMINATION	GM-OEM-400	GM-OEM-400 DD	GM-OEM-400 UK	GM-OEM-400 DD UK	GM-OEM-400 SA	GM-OEM-400 DD SA	GM-OEM-400 SA UK	GM-OEM-400 DD SA UK					RECOMMENDED	ELIMINADO ELIMINATED	INTRODUCIDO INTRODUCED	NOTAS NOTES
1	12092017	ALIVIADERO_LVS	DRAIN PLUG DW	1	1	1	1	1	1	1	1								
2	12104085	JUNTA TORIC 25,2x19,2x23	O-RING 25,2x19,2x23	1	1	1	1	1	1	1	1								
3	12092003	FILTRO CUBA LVS	DRAIN BOWL FILTER	1	1	1	1	1	1	1	1								
4	12025195	ABRAZADERA CUBETA COMPLETA	DRAIN BOWL CLAMP	1	1	1	1	1	1	1	1								
5	12024113	JUNTA CUBETA	DRAIN BOWL GASKET	1	1	1	1	1	1	1	1								
6	12023617	CUBETA	DRAIN BOWL	1	1	1	1	1	1	1	1								
7	12009997	ABRAZADERA 25-40	Worm clamp 25-40 mm	1	1	1	1	1	1	1	1								
8	12024114	MANGUERA DESAGÜE	DRAINING PIPE	1	1	1	1	1	1	1	1								

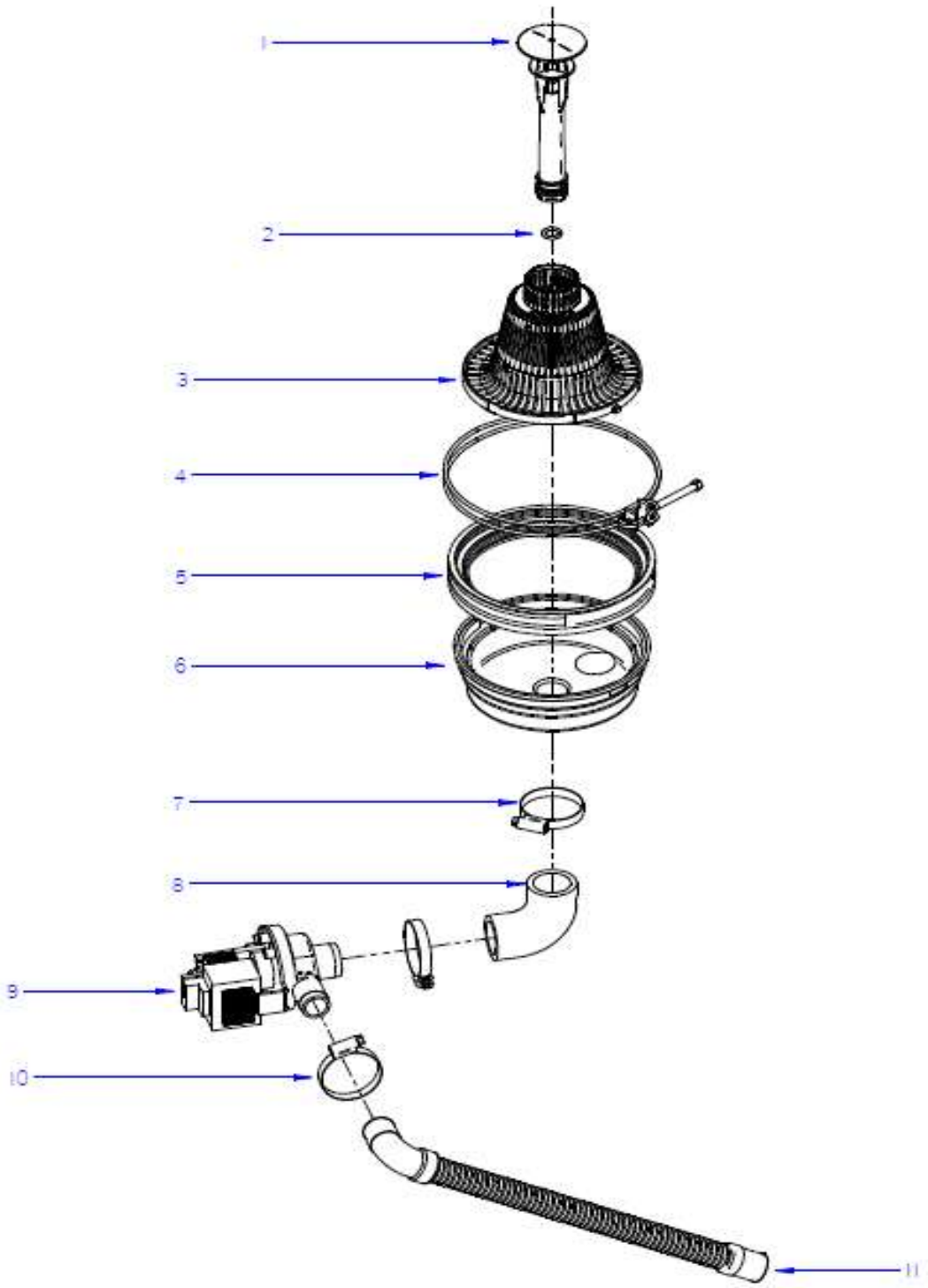

Drawing N.	Signature	Date	Device: DRAINAGE BY PUMP	Lamina / Sheet	
GW-04	Aitor U.	02-2018	GLASSWASHERS GRAND 350 & 400	4	ONNERA POLAND

ZONA / ZONE	DESAGÜE MEDIANTE BOMBA/ DRAINING BY PUMP	LÁMINA / DRAWING	GW_004

ITEM	REFERENCIA REFERENCE	DENOMINACIÓN	DENOMINATION	GM-OEM-350 B	GM-OEM-350 B DD	GM-OEM-350 B UK	GM-OEM-350 B DD UK	GM-OEM-350 B SA	GM-OEM-350 B DD SA	GM-OEM-350 B SA UK	GM-OEM-350 B DD SA UK					RECOMMENDED	ELIMINADO ELIMINATED	INTRODUCIDO INTRODUCED	NOTAS NOTES
1	12133299	ALIVIADERO_CAMPANA_ASBER	OVERFLOW CORK GE MOD. B	1	1	1	1	1	1	1	1								
2	12104085	JUNTA TORIC 25,2x19,2x23	O-RING 25,2x19,2x23	1	1	1	1	1	1	1	1								
3	12092003	FILTRO CUBA LVS	DRAIN BOWL FILTER	1	1	1	1	1	1	1	1								
4	12025195	ABRAZADERA CUBETA COMPLETA	DRAIN BOWL CLAMP	1	1	1	1	1	1	1	1								
5	12024113	JUNTA CUBETA	DRAIN BOWL GASKET	1	1	1	1	1	1	1	1								
6	12023617	CUBETA	DRAIN BOWL	1	1	1	1	1	1	1	1								
7	12009997	ABRAZADERA 25-40	Worm clamp 25-40 mm	1	1	1	1	1	1	1	1								
8	12041928	CONDUCTO ASPIRACION BOMBA	PUMP INLET PIPE	1	1	1	1	1	1	1	1								
9	12094265	BOMBA DESAGÜE	DRAINING PUMP	1	1	1	1	1	1	1	1					X			
10	12010023	ABRAZADERA 20-32	20-32 CLAMP	1	1	1	1	1	1	1	1								
11	12023666	MAGUERA DESAGÜE	DRAINING HOSE	1	1	1	1	1	1	1	1								

ZONA / ZONE	DESAGÜE MEDIANTE BOMBA/ DRAINING BY PUMP	LÁMINA / DRAWING	GW_004

ITEM	REFERENCIA REFERENCE	DENOMINACIÓN	DENOMINATION	GM-OEM-400 B	GM-OEM-400 B DD	GM-OEM-400 B UK	GM-OEM-400 B DD UK	GM-OEM-400 B SA	GM-OEM-400 B DD SA	GM-OEM-400 B SA UK	GM-OEM-400 B DD SA UK					RECOMMENDED	ELIMINADO ELIMINATED	INTRODUCIDO INTRODUCED	NOTAS NOTES
1	12133299	ALIVIADERO_CAMPANA_ASBER	OVERFLOW CORK GE MOD. B	1	1	1	1	1	1	1	1								
2	12104085	JUNTA TORIC 25,2x19,2x23	O-RING 25,2x19,2x23	1	1	1	1	1	1	1	1								
3	12092003	FILTRO CUBA LVS	DRAIN BOWL FILTER	1	1	1	1	1	1	1	1								
4	12025195	ABRAZADERA CUBETA COMPLETA	DRAIN BOWL CLAMP	1	1	1	1	1	1	1	1								
5	12024113	JUNTA CUBETA	DRAIN BOWL GASKET	1	1	1	1	1	1	1	1								
6	12023617	CUBETA	DRAIN BOWL	1	1	1	1	1	1	1	1								
7	12009997	ABRAZADERA 25-40	Worm clamp 25-40 mm	1	1	1	1	1	1	1	1								
8	12041928	CONDUCTO ASPIRACION BOMBA	PUMP INLET PIPE	1	1	1	1	1	1	1	1								
9	12094265	BOMBA DESAGÜE	DRAINING PUMP	1	1	1	1	1	1	1	1					X			
10	12010023	ABRAZADERA 20-32	20-32 CLAMP	1	1	1	1	1	1	1	1								
11	12023666	MAGUERA DESAGÜE	DRAINING HOSE	1	1	1	1	1	1	1	1								

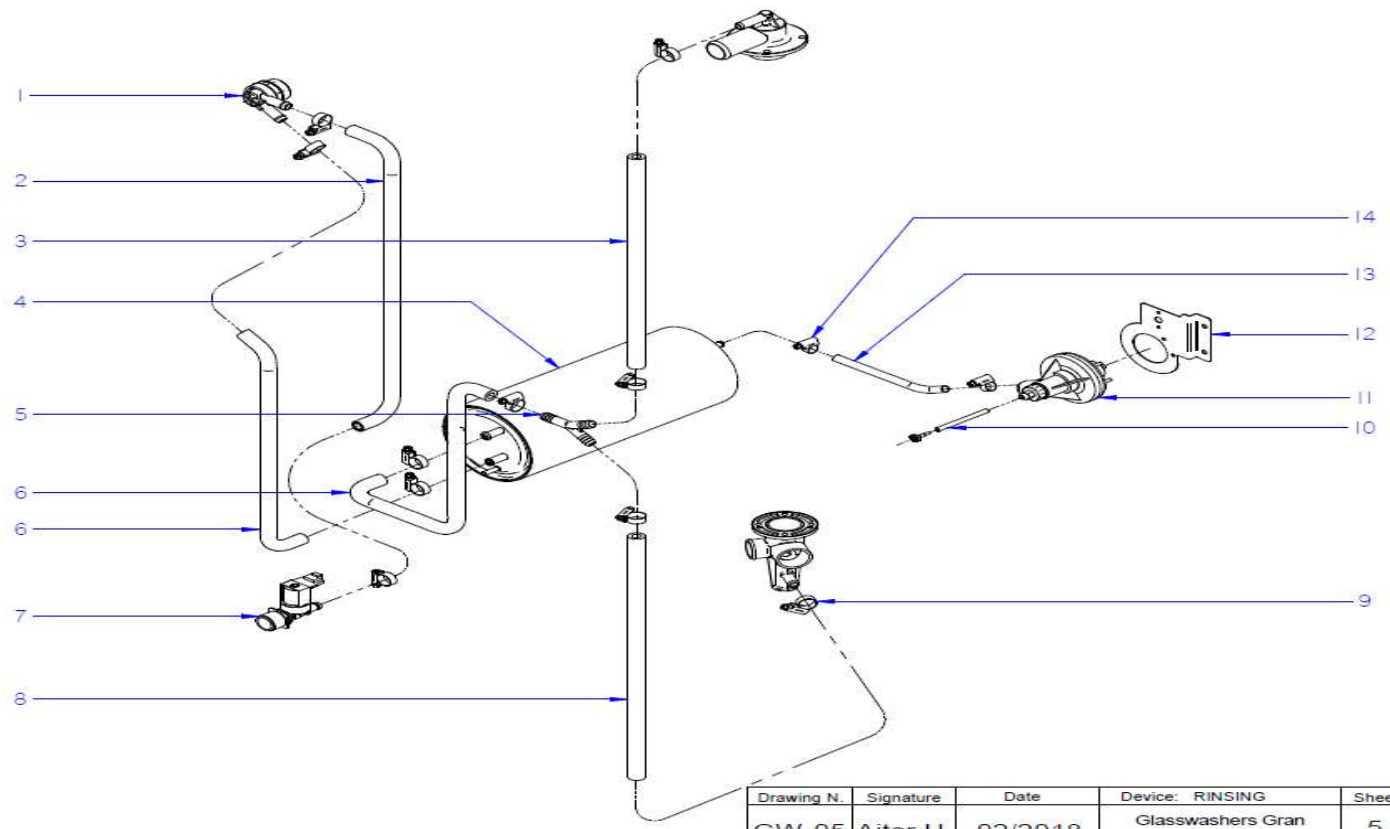

Drawing N.	Signature	Date	Device: RINSING	Sheet	
GW-05	Aitor U.	02/2018	Glasswashers Gran 350&400	5.	ONNERA POLAND

ZONA / ZONE	PARTE FUNCIONAL ACLARADO / RINSE FUNCTIONAL PART	LÁMINA / DRAWING	GW_005

ITEM	REFERENCIA REFERENCE	DENOMINACIÓN	DENOMINATION	GM-OEM-350	GM-OEM-350 B	GM-OEM-350 DD	GM-OEM-350 B DD	GM-OEM-350 UK	GM-OEM-350 B UK	GM-OEM-350 DD UK	GM-OEM-350 B DD UK					RECOMMENDED	ELIMINADO ELIMINATED	INTRODUCIDO INTRODUCED	NOTAS NOTES
1	12024568	VALVULA ANTIRRETORNO	NON-RETURN VALVE	1	1	1	1	1	1	1	1								
2	12093330	CONDUCTO EV-ANTIRERETORNO	EV - NON-RETURN VALVE HOSE	1	1	1	1	1	1	1	1								
3	12149964	CONDUCTO ACLARADO SUPERIOR	UPPER RINSE ARM HOSE	1	1	1	1	1	1	1	1								
4	12139525	CALDERIN LVS	GW BOILER	1	1	1	1	1	1	1	1								
5	12023511	RACORD Y	Y FITTING	1	1	1	1	1	1	1	1								
6	12093329	CONDUCTO CALDERIN RACORD	BOILER FITTING PIPE	2	2	2	2	2	2	2	2								
7	12025161	ELECTROVALVULA 1 VIA	1 WAY ELECTROVALVE	1	1	1	1	1	1	1	1					X			
8	12149967	CONDUCTO ACLARADO INFERIOR	LOWER RINSE ARM HOSE	1	1	1	1	1	1	1	1								
9	12010036	ABRAZADERA 12-20	12-20 CLAMP	10	10	10	10	10	10	10	10								
10	12024139	CONDUCTO ASPIRACION DET.	DETERGENT ASPIRATION PIPE	1	1	1	1	1	1	1	1								
11	12133010	DOSIFICADOR ABRILLANTADOR	RINSE AID DISPENSER	1	1	1	1	1	1	1	1					X			
12	12139530	SOPORTE DOSIFICADOR	DISPENSER HOLDER GW-350	1	1	1	1	1	1	1	1								
13	12149969	CONDUCTO DOSIFICAROD CALDERIN	DISPENSER-BOILER HOSE	1	1	1	1	1	1	1	1								
14	12010047	ABRAZADERA 8-14	8-14 CLAMP	2	2	2	2	2	2	2	2								

ZONA / ZONE	PARTE FUNCIONAL ACLARADO / RINSE FUNCTIONAL PART	LÁMINA / DRAWING	GW_005

ITEM	REFERENCIA REFERENCE	DENOMINACIÓN	DENOMINATION	GM-OEM-400	GM-OEM-400 B	GM-OEM-400 DD	GM-OEM-400 B DD	GM-OEM-400 UK	GM-OEM-400 B UK	GM-OEM-400 DD UK	GM-OEM-400 B DD UK					RECOMMENDED	ELIMINADO ELIMINATED	INTRODUCIDO INTRODUCED	NOTAS NOTES
1	12024568	VALVULA ANTIRRETORNO	NON-RETURN VALVE	1	1	1	1	1	1	1	1								
2	12093403	CONDUCTO EV-ANTIRERETORNO	EV - NON-RETURN VALVE HOSE	2	2	2	2	2	2	2	2								
3	12149966	CONDUCTO ACLARADO SUPERIOR	UPPER RINSE ARM HOSE	1	1	1	1	1	1	1	1								
4	12139525	CALDERIN LVS	GW BOILER	1	1	1	1	1	1	1	1								
5	12024192	RACORD EN CRUZ	CROSS FITTING	1	1	1	1	1	1	1	1								
6	12093329	CONDUCTO CALDERIN RACORD	BOILER FITTING PIPE	2	2	2	2	2	2	2	2								
7	12023794	ELECTROVALVULA DOBLE	2 WAY ELECTROVALVE	1	1	1	1	1	1	1	1					X			
8	12149968	CONDUCTO ACLARADO INFERIOR	LOWER RINSE ARM HOSE	1	1	1	1	1	1	1	1								
9	12010036	ABRAZADERA 12-20	12-20 CLAMP	12	12	12	12	12	12	12	12								
10	12024139	CONDUCTO ASPIRACION DET.	DETERGENT ASPIRATION PIPE	1	1	1	1	1	1	1	1								
11	12133010	DOSIFICADOR ABRILLANTADOR	RINSE AID DISPENSER	1	1	1	1	1	1	1	1					X			
12	12139530	SOPORTE DOSIFICADOR	DISPENSER HOLDER GW-350	1	1	1	1	1	1	1	1								
13	12149969	CONDUCTO DOSIFICAROD CALDERIN	DISPENSER-BOILER HOSE	1	1	1	1	1	1	1	1								
14	12010047	ABRAZADERA 8-14	8-14 CLAMP	2	2	2	2	2	2	2	2								

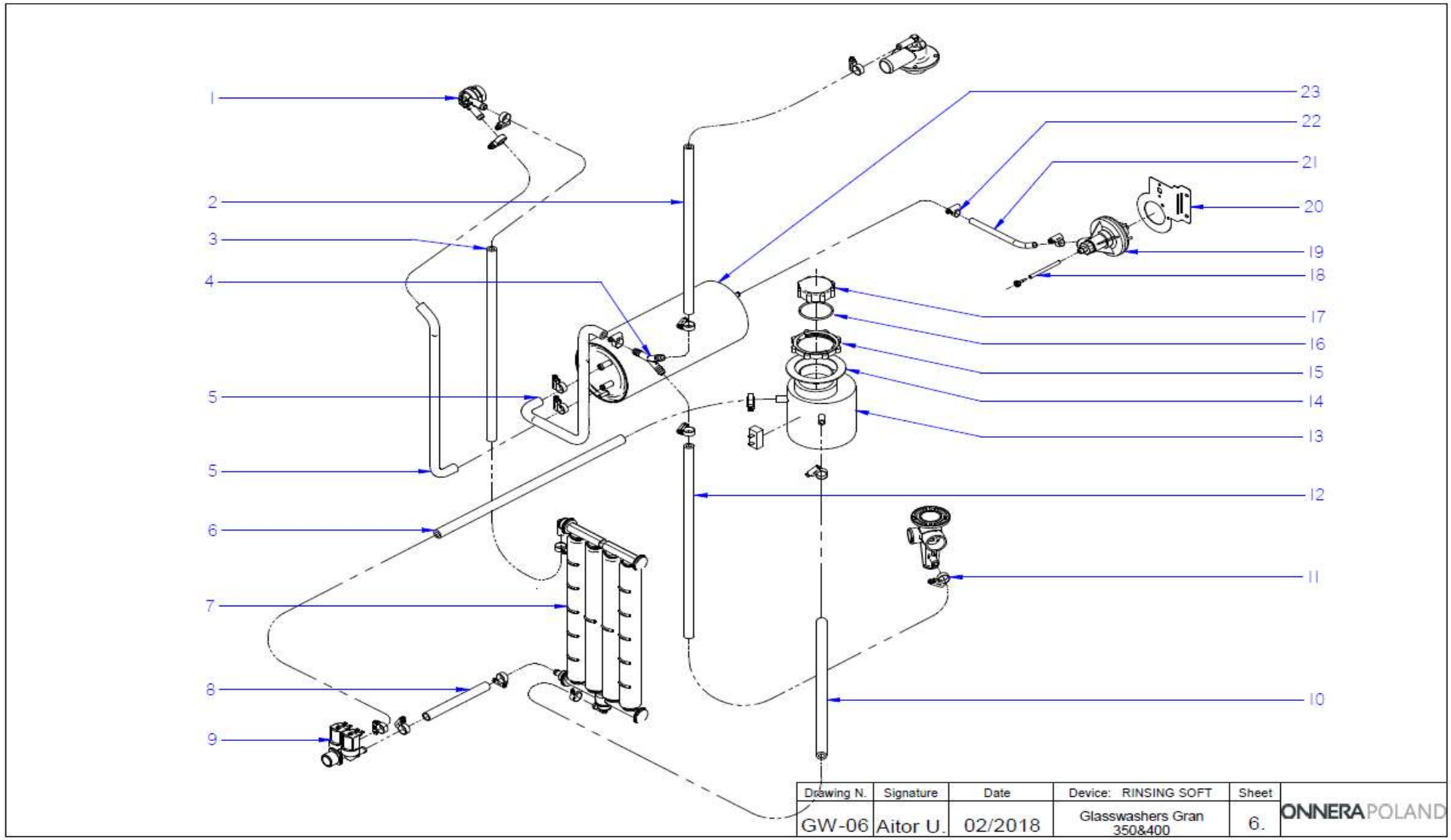
1
2
3
4
5
5
6
7
8
9
23
22
21
20
19
18
17
16
15
14
13
12
11
10
Drawing N.
Signature
Date
Device: RINSING SOFT
Sheet
GW-06
Aitor U.
02/2018
Glasswashers Gran 350&400
6.
ONNERA POLAND

ZONA / ZONE	PARTE FUNCIONAL ACLARADO SOFT/ SOFT RINSE FUNCTIONAL PART	LÁMINA / DRAWING	GW_006

ITEM	REFERENCIA REFERENCE	DENOMINACIÓN	DENOMINATION	GM-OEM-400 SOFT	GM-OEM-400 SOFT DD	GM-OEM-400 SOFT B	GM-OEM-400 SOFT B DD	GM-OEM-400 SOFT UK	GM-OEM-400 SOFT DD UK	GM-OEM-400 SOFT B UK	GM-OEM-400 SOFT B DD UK					RECOMMENDED	ELIMINADO ELIMINATED	INTRODUCIDO INTRODUCED	NOTAS NOTES
1	12024568	VALVULA ANTIRRETORNO	NON-RETURN VALVE	1	1	1	1	1	1	1	1								
2	12149964	CONDUCTO ACLARADO SUPERIOR	UPPER RINSE ARM HOSE	1	1	1	1	1	1	1	1								
3	11000083	CONDUCTO RESINAS-ANTIRETOR.	RESINS-ANTI-RETURN HOSE	1	1	1	1	1	1	1	1								
4	12023511	RACORD Y	Y FITTING	1	1	1	1	1	1	1	1								
5	12093329	CONDUCTO CALDERIN RACORD	BOILER FITTING PIPE	2	2	2	2	2	2	2	2								
6	11000083	CONDUCTO EV - BOTE DE SALES	EV- SALT CAN HOSE	1	1	1	1	1	1	1	1								
7	12024874	DESCALCIFICADOR 4 COLUMNAS	4 COLUMNS WATER SOFTENER	1	1	1	1	1	1	1	1								
8	11000083	CONDUCTO EV-RESINAS	EV - RESINS HOSE	1	1	1	1	1	1	1	1								
9	12023794	ELECTROVALVULA DOBLE	2 WAY ELECTROVALVE	1	1	1	1	1	1	1	1					X			
10	11000083	CONDUCTO BOTE DE SALES -RESINA	SALT CAN - RESISNS HOSE	1	1	1	1	1	1	1	1								
11	12010036	ABRAZADERA 12-20	12-20 CLAMP	16	16	16	16	16	16	16	16								
12	12149967	CONDUCTO ACLARADO INFERIOR	LOWER RINSE ARM HOSE	1	1	1	1	1	1	1	1								
13	12113090	BOTE_SALES_SENSOR	SALT CAN WITH SENSOR	1	1	1	1	1	1	1	1								
14	12047154	JUNTA TUERCA DEPOSITO SALES	SALT CAN GASKET	1	1	1	1	1	1	1	1								
15	12025272	TUERCA SUJECCION BOTE DE SALES	SALT CAN FIXING NUT	1	1	1	1	1	1	1	1								
16	12024031	JUNTA TAPON	SALT CAN PLUG O-RING	1	1	1	1	1	1	1	1								
17	12025273	TAPON BOTE DE SALES	SALT CAN PLUG	1	1	1	1	1	1	1	1								
18	12024139	CONDUCTO ASPIRACION DET.	DETERGENT ASPIRATION PIPE	1	1	1	1	1	1	1	1								
19	12133010	DOSIFICADOR ABRILLANTADOR	RINSE AID DISPENSER	1	1	1	1	1	1	1	1					X			
20	12139530	SOPORTE DOSIFICADOR	DISPENSER HOLDER GW-350	1	1	1	1	1	1	1	1								
21	12149969	CONDUCTO DOSIFICAROD CALDERIN	DISPENSER-BOILER HOSE	1	1	1	1	1	1	1	1								
22	12010047	ABRAZADERA 8-14	8-14 CLAMP	2	2	2	2	2	2	2	2								
23	12139525	CALDERIN LVS	GW BOILER	1	1	1	1	1	1	1	1								

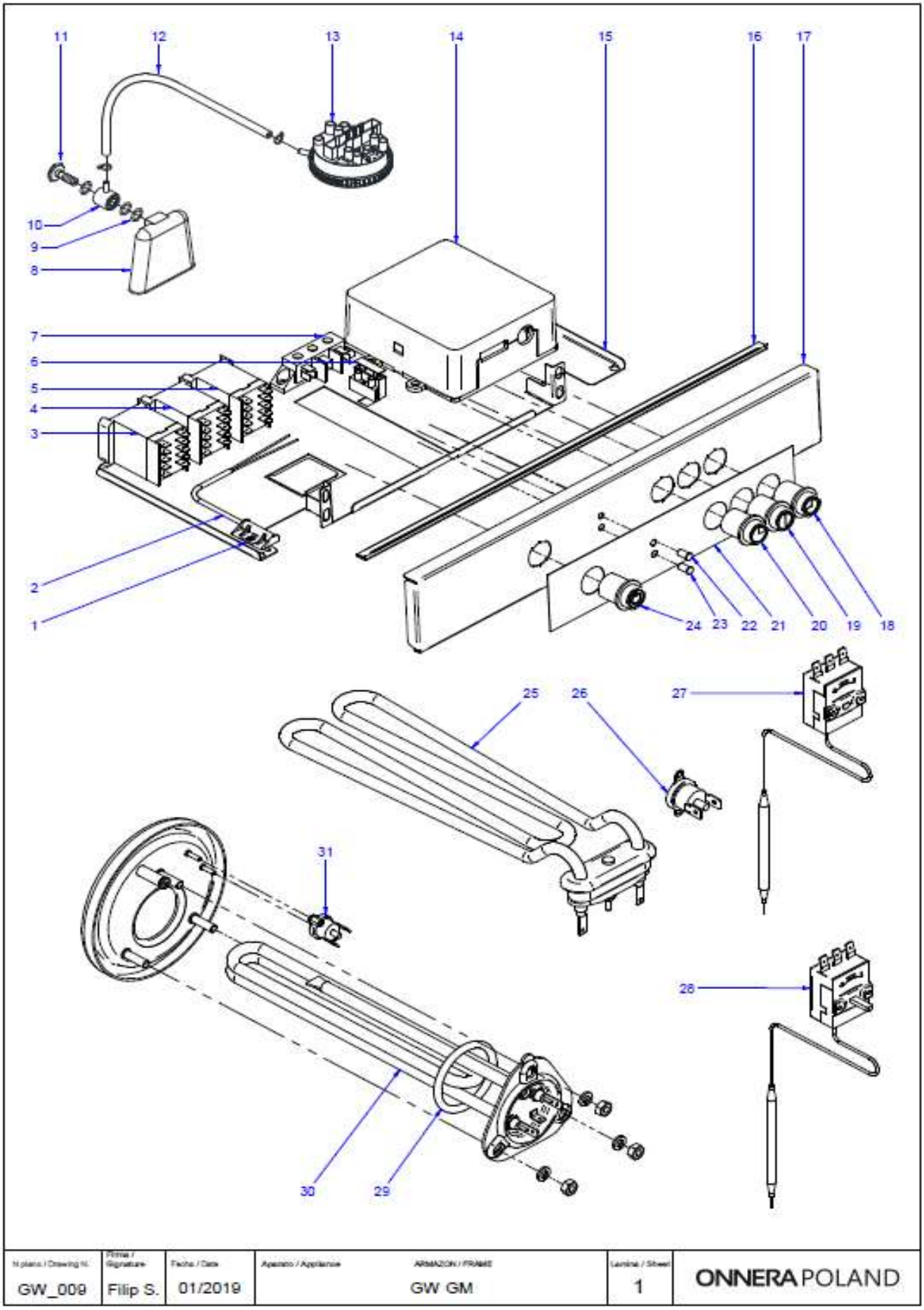

N plano / Drawing N.	Firma / Signature	Fecha / Date	Aparato / Appliance		Lamina / Sheet	
GW_009	Filip S.	01/2019	ARMAZON / FRAME	GW GM	1	ONNERA POLAND

ZONA / ZONE	PARTE FUNCIONAL ELECTRICA/ ELECTRIC FUNCTIONAL PART	LÁMINA / DRAWING	GW_009

ITEM	REFERENCIA REFERENCE	DENOMINACIÓN	DENOMINATION	GM-OEM-350	GM-OEM-350 B	GM-OEM-350 DD	GM-OEM-350 B DD	GM-OEM-350 UK	GM-OEM-350 B UK	GM-OEM-350 DD UK	GM-OEM-350 B DD UK					RECOMMENDED	ELIMINADO ELIMINATED	INTRODUCIDO INTRODUCED	NOTAS NOTES
1	12024066	AMARRE INTERRUP. MAGNETICO	MAGNETIC SWITCH FASTENER	1	1	1	1	1	1	1	1								
2	12024477	INTERRUPTOR MAGNETICO	MAGNETIC SWITCH	1	1	1	1	1	1	1	1								
3	12023706	RELE 230V. 16A 50-60 HZ	RELAY 230V. 16A 50-60 HZ	1	1	1	1	1	1	1	1					X			
4	12024011	CONTACTOR 230 V. 50-60 HZ 16A	CONTACTOR 230 V 50-60HZ 16A	1	1	1	1	1	1	1	1					X			
5	12024011	CONTACTOR 230 V. 50-60 HZ 16A	CONTACTOR 230 V 50-60HZ 16A	1	1	1	1	1	1	1	1					X			
6	12024152	FUSIBLE 10A Ø5MM 20X5	FUSE 10A Ø5MM 20X5	1	1	1	1	1	1	1	1								
S/Nº	12045569	PORTAFUSIBLE 13A 1vía UL	FUSE HOLDER 10A Ø5MM 20X5	1	1	1	1	1	1	1	1								
7	12024382	REGLETA AUXILIAR 3 CONEXIONES	3 WAY ELECTRIC CONNECTOR	1	1	1	1	1	1	1	1								
8	12024350	CAMARA PRESOSTATO	PRESSURE SWITCH	1	1	1	1	1	1	1	1								
9	12009873	JUNTA TORICA 16.01X10.77X2.62	O-RING 16.01X10.77X2.62	2	2	2	2	2	2	2	2								
10	12024157	EMPALME PRESOSTATO	PRESSURE SWITCH CONNEX	1	1	1	1	1	1	1	1								
11	12024222	TORNILLO PRESOSTATO	PRESSURE SWITCH BOLT	1	1	1	1	1	1	1	1								
12	11000066	TUBO GOMA NEGRO Ø 8*4	BLACK RUBBER PIPE Ø 8*4	1	1	1	1	1	1	1	1								
S/Nº	12023707	BRIDA ELASTICA TUBO	ELASTIC PIPE FLANGE	2	2	2	2	2	2	2	2								
13	12023803	PRESOSTATO SIMPLE 1.3-2.8 bar	1.3-2.8 bar SIMPLE PRESOSTAT	1	1	1	1	1	1	1	1					X			
14	12008750	TARJETA CONTROL ELECTRÓNICA	ELECTRONIC CONTROL CARD	1	1	1	1	1	1	1	1					X	17.05.2019		
14	12188923	TARJETA CONTROL ELECTRÓNICA	ELECTRONIC CONTROL CARD	1	1	1	1	1	1	1	1					X		17.05.2019	8101717036
15	12223609	BASE COMPONENTES ELÉCTRICOS	ELECTRIC COMPONENT BASE	1	1	1	1	1	1	1	1								
16	12169876	BURLETE SELLADO TAPA 350	UC-350 LID SEALING PROFILE	1	1	1	1	1	1	1	1								
17	*	PANEL DE CONTROL GT-350	CONTROL PANEL GT-350	1	1	1	1	1	1	1	1								Check Optionals
18	12183262	PULSADOR CICLO LARGO	SHORT CYCLE PUSH BUTTON	1	1	1	1	1	1	1	1					X			
19	12171806	PULSADOR CICLO MEDIO	MEDIUM CYCLE PUSH BUTTON	1	1	1	1	1	1	1	1					X			
20	12171805	PULSADOR CICLO CORTO	LONG CYCLE PUSH BUTTON	1	1	1	1	1	1	1	1					X			
21	*	EMBELLECEDOR G-OEM 350	G-OEM-350 STICKER	1	1	1	1	1	1	1	1								Check Optionals
22	12220785	LED VERDE 5V	5V GREEN LED LIGHT	1	1	1	1	1	1	1	1					X			
23	12169231	LED VERDE 230V	230V GREEN LED LIGHT	_	_	_	_	_	_	_	_					X			
24	12171804	PULSADOR ON/OFF MÁQUINA	ON/OFF BUTTON	1	1	1	1	1	1	1	1					X			
25	12090524	RESISTENCIA CUBA 2 kW	TANK HEATER 2 kW	1	1	1	1	1	1	1	1					X			
26	12090518	TERMOSTATO LIMITADOR CUBA	TANK SECURITY THERMOSTAT	1	1	1	1	1	1	1	1					X			
27	12161299	TERMOSTATO 60˚C CUBA	THERMOSTAT 60˚C TANK	1	1	1	1	1	1	1	1					X			

ZONA / ZONE	PARTE FUNCIONAL ELECTRICA/ ELECTRIC FUNCTIONAL PART	LÁMINA / DRAWING	GW_008

ITEM	REFERENCIA REFERENCE	DENOMINACIÓN	DENOMINATION	GM-OEM-350	GM-OEM-350 B	GM-OEM-350 DD	GM-OEM-350 B DD	GM-OEM-350 UK	GM-OEM-350 B UK	GM-OEM-350 DD UK	GM-OEM-350 B DD UK					RECOMMENDED	ELIMINADO ELIMINATED	INTRODUCIDO INTRODUCED	NOTAS NOTES
28	12134992	TERMOSTATO 27-85˚C CALDERIN	THERMOSTAT 27-85˚C BOILER	1	1	1	1	1	1	1	1					X			
29	12102062	JUNTA TORICA 62,87x73,53x5,33	O-ring 62,87x73,53x5,33	1	1	1	1	1	1	1	1								
30	12093151	RESISTENCIA CALDERIN 2.4 Kw	BOILER HEATER 2.4 kW	1	1	1	1	1	1	1	1					X			
31	12096597	TERMOSTATO LIMITADOR CALDERIN	BOILER SECURITY THERMOSTAT	1	1	1	1	1	1	1	1								

ZONA / ZONE	PARTE FUNCIONAL ELECTRICA/ ELECTRIC FUNCTIONAL PART	LÁMINA / DRAWING	GW_008

ITEM	REFERENCIA REFERENCE	DENOMINACIÓN	DENOMINATION	GM-OEM-400	GM-OEM-400 B	GM-OEM-400 DD	GM-OEM-400 B DD	GM-OEM-400 UK	GM-OEM-400 B UK	GM-OEM-400 DD UK	GM-OEM-400 B DD UK	GM-OEM-400 SOFT	GM-OEM-400 SOFT B	GM-OEM-400 SOFT DD	GM-OEM-400 SOFT B DD	RECOMMENDED	ELIMINADO ELIMINATED	INTRODUCIDO INTRODUCED	NOTAS NOTES
1	12024066	AMARRE INTERRUP. MAGNETICO	MAGNETIC SWITCH FASTENER	1	1	1	1	1	1	1	1	1	1	1	1				
2	12024477	INTERRUPTOR MAGNETICO	MAGNETIC SWITCH	1	1	1	1	1	1	1	1	1	1	1	1				
3	12023706	RELE 230V. 16A 50-60 HZ	RELAY 230V. 16A 50-60 HZ	1	1	1	1	1	1	1	1	1	1	1	1	X			
4	12024011	CONTACTOR 230 V. 50-60 HZ 16A	CONTACTOR 230 V 50-60HZ 16A	1	1	1	1	1	1	1	1	1	1	1	1	X			
5	12024011	CONTACTOR 230 V. 50-60 HZ 16A	CONTACTOR 230 V 50-60HZ 16A	1	1	1	1	1	1	1	1	1	1	1	1	X			
6	12024152	FUSIBLE 10A Ø5MM 20X5	FUSE 10A Ø5MM 20X5	1	1	1	1	1	1	1	1	1	1	1	1				
S/Nº	12045569	PORTAFUSIBLE 13A 1vía UL	FUSE HOLDER 10A Ø5MM 20X5	1	1	1	1	1	1	1	1	1	1	1	1				
7	12024382	REGLETA AUXILIAR 3 CONEXIONES	3 WAY ELECTRIC CONNECTOR	1	1	1	1	1	1	1	1	1	1	1	1				
8	12024350	CAMARA PRESOSTATO	PRESSURE SWITCH	1	1	1	1	1	1	1	1	1	1	1	1				
9	12009873	JUNTA TORICA 16.01X10.77X2.62	O-RING 16.01X10.77X2.62	2	2	2	2	2	2	2	2	2	2	2	2				
10	12024157	EMPALME PRESOSTATO	PRESSURE SWITCH CONNEX	1	1	1	1	1	1	1	1	1	1	1	1				
11	12024222	TORNILLO PRESOSTATO	PRESSURE SWITCH BOLT	1	1	1	1	1	1	1	1	1	1	1	1				
12	11000066	TUBO GOMA NEGRO Ø 8*4	BLACK RUBBER PIPE Ø 8*4	1	1	1	1	1	1	1	1	1	1	1	1				
S/Nº	12023707	BRIDA ELASTICA TUBO	ELASTIC PIPE FLANGE	2	2	2	2	2	2	2	2	2	2	2	2				
13	12023803	PRESOSTATO SIMPLE 1.3-2.8 bar	1.3-2.8 bar SIMPLE PRESOSTAT	1	1	1	1	1	1	1	1	1	1	1	1	X			
14	12008750	TARJETA CONTROL ELECTRÓNICA	ELECTRONIC CONTROL CARD	1	1	1	1	1	1	1	1	_	_	_	_	X	17.05.2019		
14	12188923	TARJETA CONTROL ELECTRÓNICA	ELECTRONIC CONTROL CARD	1	1	1	1	1	1	1	1	_	_	_	_	X		17.05.2019	8101717036
14	12188923	TARJETA CONTROL ELECTRÓNICA	ELECTRONIC CONTROL CARD	_	_	_	_	_	_	_	_	1	1	1	1	X			
15	12223608	BASE COMPONENTES ELÉCTRICOS	ELECTRIC COMPONENT BASE	1	1	1	1	1	1	1	1	1	1	1	1				
16	12169876	BURLETE SELLADO TAPA 400	GW-400 LID SEALING PROFILE	1	1	1	1	1	1	1	1	1	1	1	1				
17	*	PANEL DE CONTROL GT-400	CONTROL PANEL GT-400	1	1	1	1	1	1	1	1	1	1	1	1				Check Optionals
18	12183262	PULSADOR CICLO LARGO	SHORT CYCLE PUSH BUTTON	1	1	1	1	1	1	1	1	1	1	1	1	X			Check Optionals
19	12171806	PULSADOR CICLO MEDIO	MEDIUM CYCLE PUSH BUTTON	1	1	1	1	1	1	1	1	1	1	1	1	X			Check Optionals
20	12171805	PULSADOR CICLO CORTO	LONG CYCLE PUSH BUTTON	1	1	1	1	1	1	1	1	1	1	1	1	X			
21	*	EMBELLECEDOR G-OEM 400	G-OEM-400 STICKER	1	1	1	1	1	1	1	1	_	_	_	_				
21	*	EMBELLECEDOR G-OEM 400 SOFT	G-OEM-400 STICKER SOFT	_	_	_	_	_	_	_	_	1	1	1	1				
22	12220785	LED VERDE 5V	5V GREEN LED LIGHT	1	1	1	1	1	1	1	1	1	1	1	1	X			
23	12169231	LED VERDE 230V	230V GREEN LED LIGHT	_	_	_	_	_	_	_	_	1	1	1	1	X			
24	12171804	PULSADOR ON/OFF MÁQUINA	ON/OFF BUTTON	1	1	1	1	1	1	1	1	1	1	1	1	X			
25	12090524	RESISTENCIA CUBA 2 kW	TANK HEATER 2 kW	1	1	1	1	1	1	1	1	1	1	1	1	X			

ZONA / ZONE	PARTE FUNCIONAL ELECTRICA/ ELECTRIC FUNCTIONAL PART	LÁMINA / DRAWING	GW_008

ITEM	REFERENCIA REFERENCE	DENOMINACIÓN	DENOMINATION	GM-OEM-400	GM-OEM-400 B	GM-OEM-400 DD	GM-OEM-400 B DD	GM-OEM-400 UK	GM-OEM-400 B UK	GM-OEM-400 DD UK	GM-OEM-400 B DD UK	GM-OEM-400 SOFT	GM-OEM-400 SOFT B	GM-OEM-400 SOFT DD	GM-OEM-400 SOFT B DD	RECOMMENDED	ELIMINADO ELIMINATED	INTRODUCIDO INTRODUCED	NOTAS NOTES
26	12090518	TERMOSTATO LIMITADOR CUBA	TANK SECURITY THERMOSTAT	1	1	1	1	1	1	1	1	1	1	1	1	X			
27	12161299	TERMOSTATO 60˚C CUBA	THERMOSTAT 60˚C TANK	1	1	1	1	1	1	1	1	1	1	1	1	X			
28	12134992	TERMOSTATO 27-85˚C CALDERIN	THERMOSTAT 27-85˚C BOILER	1	1	1	1	1	1	1	1	1	1	1	1	X			
29	12102062	JUNTA TORICA 62,87x73,53x5,33	O-ring 62,87x73,53x5,33	1	1	1	1	1	1	1	1	1	1	1	1				
30	12093124	RESISTENCIA CALDERIN 2.8 Kw	BOILER HEATER 2.8 kW	1	1	1	1	_	_	_	_	1	1	1	1	X			
30	12093151	RESISTENCIA CALDERIN 2.4 Kw	BOILER HEATER 2.4 kW	_	_	_	_	1	1	1	1	_	_	_	_	X			
31	12096597	TERMOSTATO LIMITADOR CALDERIN	BOILER SECURITY THERMOSTAT	1	1	1	1	1	1	1	1	1	1	1	1				

ZONA / ZONE	VARIOS / MISCELLANOUS	LÁMINA / DRAWING	

ITEM	REFERENCIA REFERENCE	DENOMINACIÓN	DENOMINATION	GM-OEM-350/400	GM-OEM-400 B	GM-OEM-400 DD	GM-OEM-400 B DD	GM-OEM-400 UK	GM-OEM-400 B UK	GM-OEM-400 DD UK	GM-OEM-400 B DD UK	GM-OEM-400 D SOFT	GM-OEM-400 B DD SOFT	GM-OEM-400 DD SOFT UK	GM-OEM-400 B DD SOFT UI	RECOMMENDED	ELIMINADO ELIMINATED	INTRODUCIDO INTRODUCED	NOTAS NOTES
	12218976	FOLLETO INSTRUCCIÓN GT-OEM	MANUAL INSTRUCTION GT-OEM	1	1	1	1	1	1	1	1	1	1	1	1				
	12129067	ESQUEMA TEÓRICO LVS TECH	TECH GW THEORETICAL DIAGRAM	1	1	1	1	1	1	1	1	1	1	1	1				
	12136920	LVS TECH ESQUEMA MONTAJE	GW TECH ASSEMBLY DIAGRAM	1	1	1	1	1	1	1	1	1	1	1	1				
	12024183	CABLEADO TIERRA BOMBA LAVADO	PUMP EARTH WIRING	1	1	1	1	1	1	1	1	1	1	1	1				
	12136916	INSTALACION ELECTRICA LVS TECH	TECH GW WIRING SYSTEM	1	1	1	1	1	1	1	1	1	1	1	1				
	12023746	CABLE DE ALIMENTACION EU	EU POWER CORD	1	1	1	1	_	_	_	_	1	1	_	_				
	12025112	CABLE DE ALIMENTACION UK	UK POWER CORD	_	_	_	_	1	1	1	1	_	_	1	1				
	12136692	CONDENSADOR 33 µF	33 µF CONDENSADER	2	2	2	2	2	2	2	2	2	2	2	2				
	12165444	CABLE MOD. SOFTENER	SOFTENER MOD. CABLE	_	_	_	_	_	_	_	_	1	1	1	1				
	*	CABLE CONEXIÓN BOTONES	BUTTONS CONNECTION WIRE	1	1	1	1	1	1	1	1	1	1	1	1				Check Optionals

TECH DD, B, W

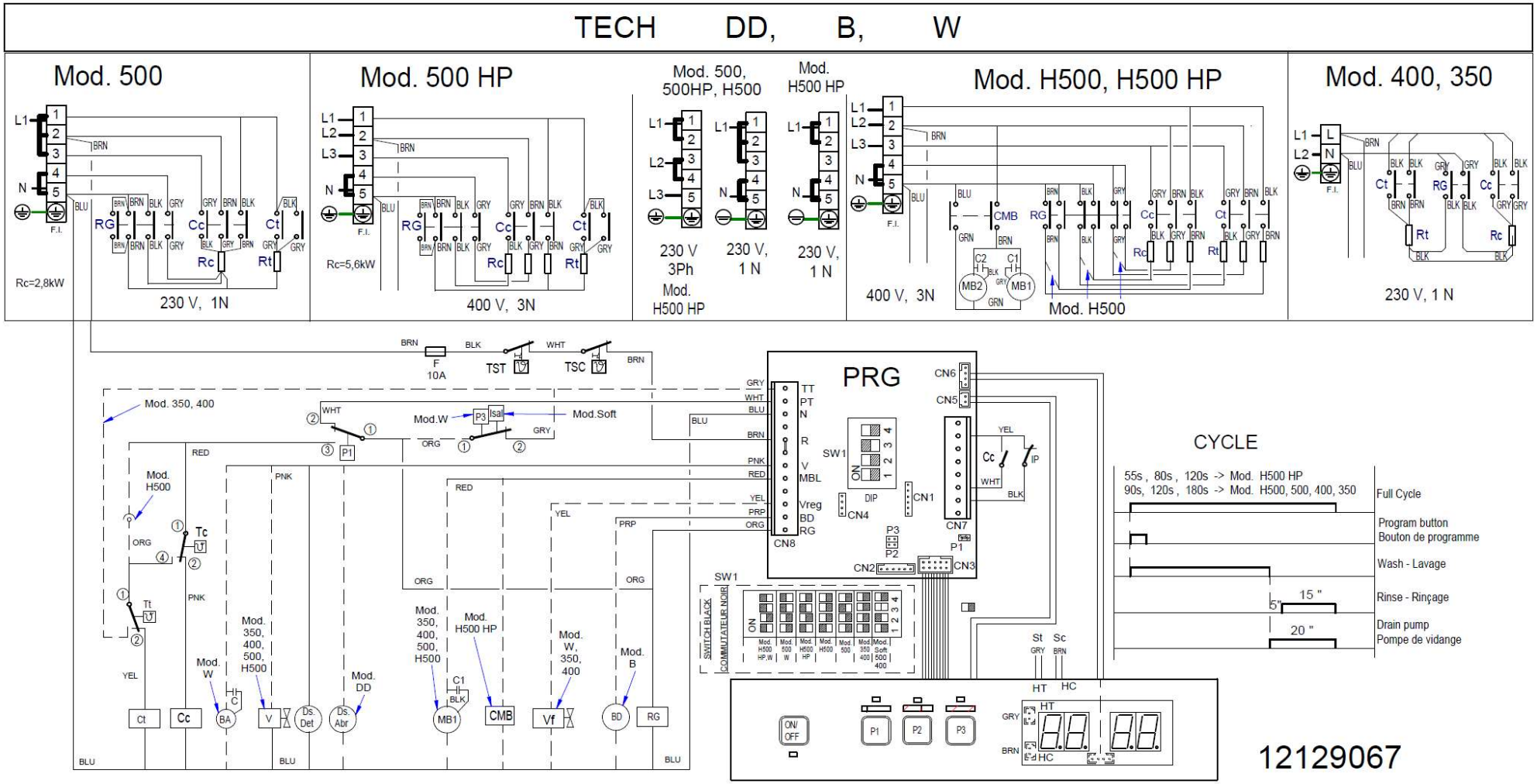
Mod. 500
Rc=2,8kW
230 V, 1N
Mod. 500 HP
Rc=5,6kW
400 V, 3N
Mod. 500, 500HP, H500
230 V 3Ph
Mod. H500 HP
Mod. H500 HP
230 V, 1 N
230 V, 1 N
Mod. H500, H500 HP
400 V, 3N
Mod. H500
Mod. 400, 350
230 V, 1 N
F 10A
TST
TSC
Mod. 350, 400
Mod.W
Mod.Soft
Mod. H500
Mod. 350, 400, 500, H500
Mod. H500 HP
Mod. W, 350, 400
Mod. B
Mod. DD
Mod. W
PRG
CN8
CN6
CN5
CN7
CN1
CN4
CN2
CN3
SW1
DIP
SWITCH BLACK
COMMUTATEUR NOIR
CYCLE
55s , 80s , 120s -> Mod. H500 HP
90s, 120s , 180s -> Mod. H500, 500, 400, 350
Full Cycle
Program button
Bouton de programme
Wash - Lavage
Rinse - Rinçage
Drain pump
Pompe de vidange
15 "
20 "
5"
St
Sc
HT
HC
ON/ OFF
P1
P2
P3
12129067

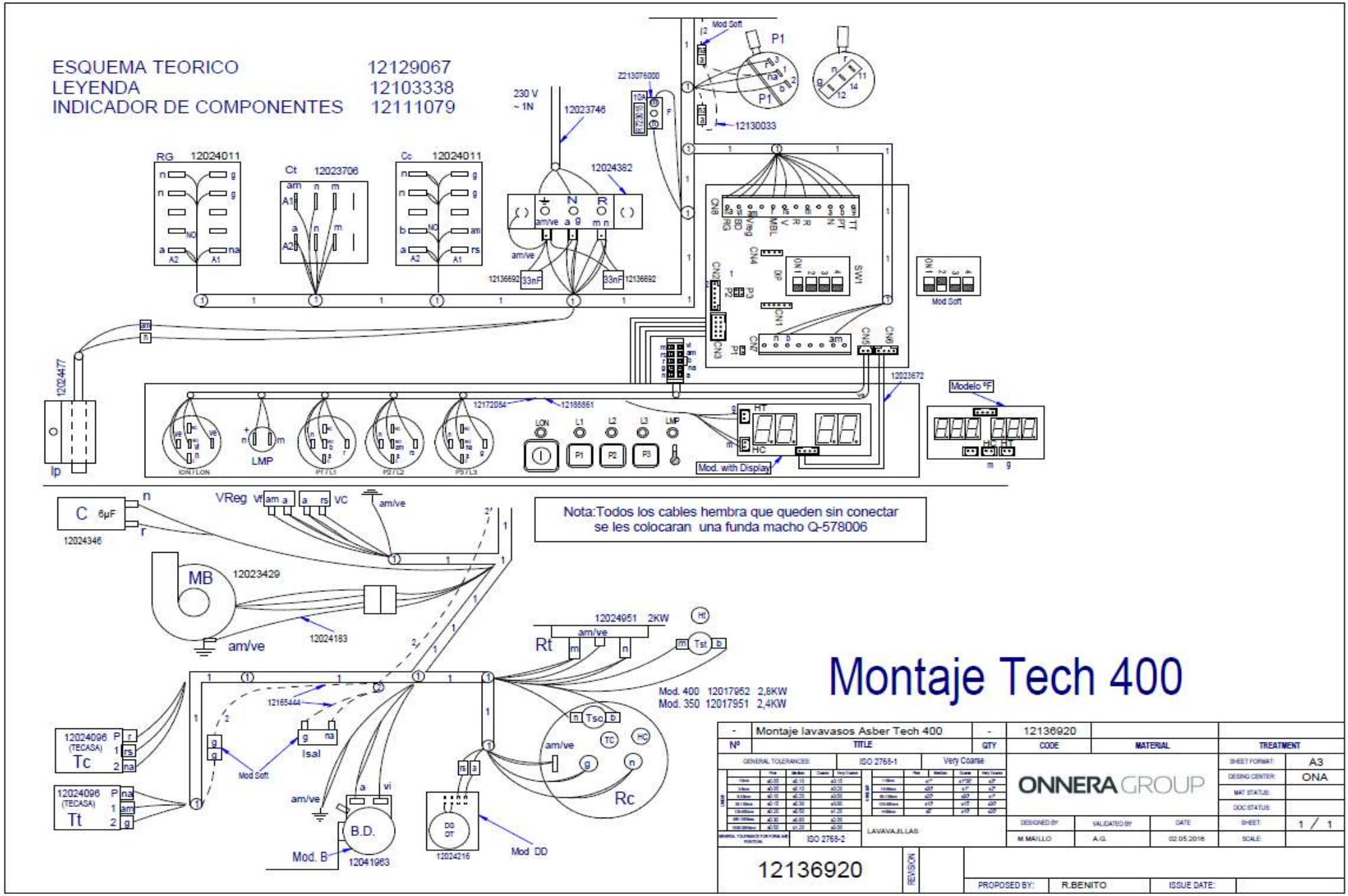

Nota:Todos los cables hembra que queden sin conectar se les colocaran una funda macho Q-578006

	ESPAÑOL	ENGLISH	FRANÇAIS	DUTSCH	ITALIANO	PORTUGUES
⊕	Tierra de proteción	Grounding	Mise à terre	toma de tierra? Erdung	Messa a terra	
P	Puente de Conexión	Terminal block bridge	Pontage pour bloc de jonction	Verbindungsblockanschluss	Ponte di connessione	
BA	Bomba Aclarado	Rinse pump	Pompe de rinçage	Spülmittel dossierpumpe	Pompa di risciacquo	
BD	Bomba desagüe	Drain pump	Pompe de vidange	Abflubpumpe	Pompa scarico	
C, C1, C2	Condensador	Capacitor	Condensateur	kondensator	Condensatore	
CMB	Contactor bomba lavado	Wash pump contactor	Contacteur pompe de lavage	Türrelais	Contattore pompa lavaggio	
Cc	Contactor calentamiento calderin	Boiler heating contactor	Contacteur chauffage surchauffeur	Kontaktschütz Waschpumpe	Contattore riscaldamento boiler	
Ct	Contactor calentamiento tanque	Tank heating contactor	Contacteur chauffage cuve	Kontaktschütz Boilerheizung	Contattore riscaldamento serbatorio	
CP	Relé puerta	Door relay	Relais de porte	Kontaktschütz Heizung tank	Rele' porta	
Ds. Abr	Dosificador Abrillantador	Dispenser	Distributeur	Klarspülmittel dossierpumpe	Dosatore brillantante	
Ds. Det.	Dosificador Detergente	Detergent dispenser	Distributeur de détergent	Dosierer Spülmittel	Dosatore detergente	
F	Fusible	Fuse	Fusible	Fuse	Fusibile	
H1	Lampara encendido	Operation light	Voyant funcionement	Betriebsanzeigelampe	Spia accensione	
H2, H5	Lampara de marcha	Start light	Voyant demarrage	Startanzeigelampe	Spia avvio	
H3	Lampara maquina preparada	Light machine ready	Voyant machine prêt	Betriebsbereitschaftsanzeigelampe	Pilota macchina preparata	
H4	Lampara falta Sal	Lamp salt missing	Lampe absence sel	Lampe Mangel Salz	Spia sale mancante	
HRS	Sistema recuperador energia	Heat Recovery System	Systéme de récupération de chaleur	System für Hitze-Rückgewinnung	Sistema con recupero di calore	
IG	Interruptor general	Main switch	Interrupteur général	Hauptschalter	Interruttore generale	
IP	Micro puerta	Door microswitch	Micro porte	Mikroschalter Tür	Micro porta	
Ist	Pulsador marcha	push button start	bouton de démarrage	Schalter (Ein)	Pulsante Inizio	
L1 L2 L3	Fases Conexión Eléctrica	Power Supply Phases	Phases de alimentation	Stromanschlussfase	Fasi di alimentazione	
MB1, MB2	Bomba lavado	Wash Pump	Pompe de lavage	Waschpumpe	Pompa lavaggio	
M	Motor Programador lavado	Wash timer Motor	Programmeur Moteur lavage	Motor Programmiervorrichtung	Motore programmatore	
Mav.R	Motor Avance rapido Prg. Lav	Fast Forward Motor Prg. Wash	Moteur Avance rapide Prg. Lav	Motor Programmiervorrich.Betrieb	Motore programmatore avanzamento rapido	
M1, 2, 3, 4, 5	Micros Programador Lavado	Wash Programmer switch	laver micro-programmeur	Motor Programmiervorrich.Spülen	Micro programmatore di lavaggio	
M20, 21, 22, 23	Programador Regeneracion	Regeneration Timer	Programmeur régénération	Regenerierungsprogramm	Timer di regenerazione	
P	Puente	Electric bridge	Pont électrique	Elektrischestag	Ponte elettrico	
P1	Presostato Tanque	Tank Pressure switch	Pressostat de cuve	Tank Druckwächter	Pressostato serbatorio	
P2	Presostato Bomba desagüe	Drain pump Pressure switch	Pressostat de Pompe de vidange	Abflubpumpe Druckwächter	Pressostato pompa scarico	
P3	Presostato calderin	Boiler Pressure switch	Pressostat de surchauffeur	Boiler Druckwächter	Pressostato boiler	
PRG	Programador Electronico	Electric programmer	Programmateur électronique	Elektronischer Programmierer	Programmatore elettronico	
PRG P2	Puente Soft Start	Soft Start Jumper	Soft Start Cavalier	Soft Start Brücke	Ponte Soft Start	
Rc	Resistencia calderin	Boiler heating element	Resistance surchauffeur	Heizwiderstand Boiler	Resistenza boiler	
RG	Relé General	Main Relay	Relais principal	StromversogungsanschluB Gener.	Rele' generale	
RST	Rele Marcha	Start up relay		Relais	Rele' inizio	
Rt	Resistencia tanque	Tank heating element	Resistance cuve	Heizwiderstand tank	Resistenza serbatorio	
SC	Sonda Temperatura Calderin	Boiler temperature sensor	Surchauffeur capteur de température	Temperatursensor Boiler	Boiler sonda temperatura	
ST	Sonda Temperatura tanque	Tank temperature sensor	Cuve capteur de température	Temperatursensor Tank	Serbatorio sonda temperatura	
TC	Termostato calderin	Boiler thermostat	Thermostat surchauffeur	Thermostat kessel	Termostato boiler	
Tmp	Temporizador	Timer	Minuteur	Timer	Timer	
TRF	Transformador	Transformer	Transformateur	Transformator	Transformatore	
TSC	Termostato Limitador calderin	Boiler Hi-limit thermostat	Thermostat Limiteur surchauffeur	Begrenzer Boiler	Limitatore boiler	
TST	Termostato Limitador tanque	Tank Hi-limit thermostat	Thermostat Limiteur de cuve	Begrenzer tank	Limitatore serbatorio	
TT	Termostato tanque	Tank thermostat	Thermostat de cuve	Thermostat tank	Termostato serbatorio	
V	Electroválvula llenado	Water solenoid valve	Electrovanne d'eau	Elektroventil Füllen und Spülen	Elettroval.riempimento e risciacquo	
Vf	Electroválvula agua Fria	Water solenoid valve	Electrovanne d'eau	Elektroventil Füllen und Spülen	Elettroval.riempimento e risciacquo	
VR1, VR2,VR3,BR	Electrovalvulas Regeneracion	Regeneration solenoid valve	vanne de régénération	Regenenerventil	Valvola di rigenerazione	
	COLOR	***COLOUR***	***COULEURS***	***FARBEN***	***COLORE***	
a = BLU	Azul	Blue	Bleu	Blau	Blu	
am = YEL	Amarillo	Yellow	Jaune	Gelb	Giallo	
am/ve = YEL/GRN	Amarillo/Verde	Yellow / green	Jaune / vert	Gelb/ grün	Giallo/ verde	
b = WHT	Blanco	White	Blanc	WeiB	Bianco	
g = GRY	Gris	Grey	Gris	Grau	Grigio	
m = BRN	Marron	Brown	Marron	Braun	Marrone	
n = BLK	Negro	Black	Noir	Schwarz	Nero	
na = ORG	Naranja	Orange	Orange	Orange	Arancio	
r = RED	Rojo	Red	Rouge	Rot	Rosso	
rs = PNK	Rosa	Pink	Rose	Rosa	Rosa	
ve = GRN	Verde	Green	Vert	Grün	Verde	
vi = PRP	Violeta	Purple	Pourpre	Violett	Viola	
			12103338			**12103338**